Work Order ID 68446

Wednesday, April 13, 2011 2:32:50 PM

~~PRELIMINARY ISSUE~~ KJ

Item ID: D4380-25
Revision ID: PRELIM
Item Name: Cover, Cabin Light

Accept

Setup **Start**
Stop

Start Date: 4/13/2011 **Start Qty:** 3.00
Required Date: 4/14/2011 **Req'd Qty:** 3.00
Reference:

Cust Item ID:
Customer:

Run **Start**
Stop

Approvals: **Process Plan:** _____ **Date:** _____ **Tooling:** _____ **Date:** _____
QC: _____ **Date:** _____ **SPC (Y/N):** _____ **Date:** _____

Sequence ID/ Work Center ID	Operation Description	Set Up/ Run Hours	Tool ID	Tool #	Plan Code	Accept Qty	Reject Qty	Reject Number	Insp. Stamp
Draw Nbr / **Revision Nbr**									
D4380 / ~~PA9~~ A									
100		0.00							
HandThermo	**Memo**	0.00				x3			DL 11/04/14
Hand Finishing Thermoforming	1-Cut Sheet to required Blank size								
105		0.00							
HandThermo	Dry Material					x3			DL 11/04/14
Hand Finishing Thermoforming	**Memo**	0.00							
	Dry Sheet as per QSI022 Kydex								
	Temp: 150° F								
	Time IN: 4:30 pm	11/04/13							
	Time OUT: 7:00 am	11/04/14							

Work Order ID 68446

Wednesday, April 13, 2011 2:32:50 PM

Item ID: D4380-25
Revision ID: PRELIM
Item Name: Cover, Cabin Light

Accept

Setup Start
Stop

Start Date: 4/13/2011 **Start Qty:** 3.00
Required Date: 4/14/2011 **Req'd Qty:** 3.00
Reference:

Cust Item ID:
Customer:

Run Start
Stop

Approvals: **Process Plan:** _____ **Date:** _____ **Tooling:** _____ **Date:** _____
QC: _____ **Date:** _____ **SPC (Y/N):** _____ **Date:** _____

Sequence ID/ Work Center ID	Operation Description	Set Up/ Run Hours	Tool ID	Tool #	Plan Code	Accept Qty	Reject Qty	Reject Number	Insp. Stamp
110		0.00							
Thermoform	**Memo**	0.00				x3			DL 11/04/14
Thermoforming Machine	1-Machine Set-Up 2-Pre-heat Tool to required temp. 3-Thermoform as per Dwg and Folio #FTA122 using tool DT9747 Dwg Rev: PAQ Folio Rev: A								
120	QC2- Inspect parts off machine FAI/FAIB	0.00							
QC	**Memo**	0.00				x3			DL 11/04/14
Quality Control	Visuallly inspect part for proper formation and texture								
130	QC8- Inspect parts - second check	0.00							
QC	**Memo** Q43 PAQ 11/4/14	0.00							
Quality Control									

Work Order ID 68446

Wednesday, April 13, 2011 2:32:50 PM

Item ID: D4380-25
Revision ID: PRELIM
Item Name: Cover, Cabin Light

Accept

Setup Start
Stop

Start Date: 4/13/2011 **Start Qty:** 3.00
Required Date: 4/14/2011 **Req'd Qty:** 3.00
Reference:

Cust Item ID:
Customer:

Run Start
Stop

Approvals: **Process Plan:** _____ **Date:** _____ **Tooling:** _____ **Date:** _____
QC: _____ **Date:** _____ **SPC (Y/N):** _____ **Date:** _____

Sequence ID/ Work Center ID	Operation Description	Set Up/ Run Hours	Tool ID	Tool #	Plan Code	Accept Qty	Reject Qty	Reject Number	Insp. Stamp
140		0.00							
HandThermo	Memo	0.00				x3			DL 4/04/14
Hand Finishing Thermoforming	1-Trim to finished dimensions as per Dwg								
150	QC2- Inspect parts off machine FAI/FAIB	0.00							
QC	Memo	0.00				x3			DL 4/04/14
Quality Control	Complete FAI document								
160	QC5- Inspect part completeness to step on W/O	0.00							
QC	Memo Qty 3 PAS only	0.00							
Quality Control	2 110414 JA-03								

Work Order ID 68446

Wednesday, April 13, 2011 2:32:50 PM

Item ID: D4380-25
Revision ID: PRELIM
Item Name: Cover, Cabin Light

Accept

Setup Start
Stop

Start Date: 4/13/2011 **Start Qty:** 3.00
Required Date: 4/14/2011 **Req'd Qty:** 3.00
Reference:

Cust Item ID:
Customer:

Run Start
Stop

Approvals: **Process Plan:** _____ **Date:** _____ **Tooling:** _____ **Date:** _____
QC: _____ **Date:** _____ **SPC (Y/N):** _____ **Date:** _____

Sequence ID/ Work Center ID	Operation Description	Set Up/ Run Hours	Tool ID	Tool #	Plan Code	Accept Qty	Reject Qty	Reject Number	Insp. Stamp
170	Identify as per dwg & Stock Location:_____	0.00							
Packaging	Memo Eagle	0.00							
Packaging									
180	QC21- Final Inspection - Work Order Release	0.00							
QC	Memo	0.00							
Quality Control									

11/04/14 (3)

11/5/16

CL 11/04/14

POSITIVE RECALL
EFFECTIVE 11-04-13 AUTH
RELEASED DATE 11/05/12

RD2370

Picklist Print

Wednesday, April 13, 2011 2:32:47 PM

Work Order ID: 68446

Parent Item: D4380-25

Parent Item Name: Cover, Cabin Light

Start Date: 4/13/2011 **Required Date:** 4/14/2011

Start Qty: 3.00 **Required Qty:** 3.00

Comments: Rev. A New Issue 11/04/04 DL verified by:EC

Component Item ID/ Item Name	Replacement Item ID	Mfg/ Purch	Bin Item	Primary Location	Last Location	Route Seq ID	Unit of Measure	Qty on Hand	Qty per Kit	Total Qty	Qty Issued	Date Issued	Status
MKYD6185S.080-P3-62015 6185 KYDEX .080"		Purchased	No			100	sf	530.6026	3.46875	10.40625			

Location	Loc Qty	Loc Code
therm	530.602647	
116576	530.602647	

DLc
11/04/14

10.40625 sq ft.

DART AEROSPACE LTD	Work Order:	68446
Description:	Part Number:	D4380-25
Inspection Dwg: D4380 Rev: PA8		Page 1 of 1

FIRST ARTICLE INSPECTION CHECKLIST

THERMOFORMING SECTION

Description	Accept	Reject	Method of Inspection	Comments
Inside Radii less than 1/4 "	✓			
Shape Definition	✓			
Texture Retention	✓			
Material imperfections such as bumps, cracks, voids, scratching	✓			

Measured by:	DL	Date:	11/04/14

TRIMMING SECTION

Drawing Dimension	Tolerance	Actual Dimension	Accept	Reject	Method of Inspection	Comments
4.0"	+/- .100	3.96"	✓		Vern DL-02	
1.0"	+/- .100	1.08"	✓		Vern DL-02	
0.75"	+/- .100	0.757"	✓		Vern DL-02	

Measured by:	DL	Date:	11/04/14
Audited by:	[illegible]	Date:	11/04/14
Preliminary Approval:		Date:	

Rev	Date	Change	Revised by	Approved
B	10.04.14	Added preliminary approval	KJ	

10.04.14

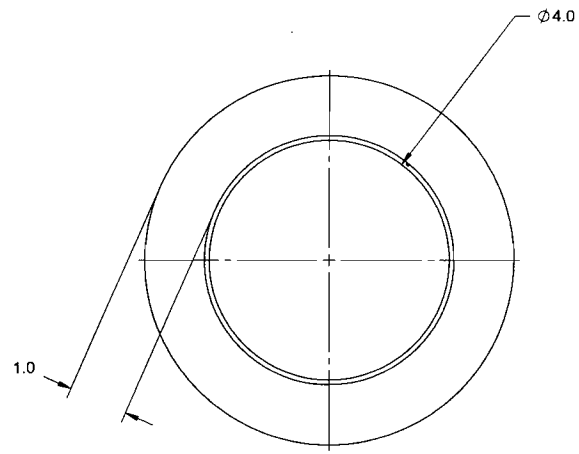

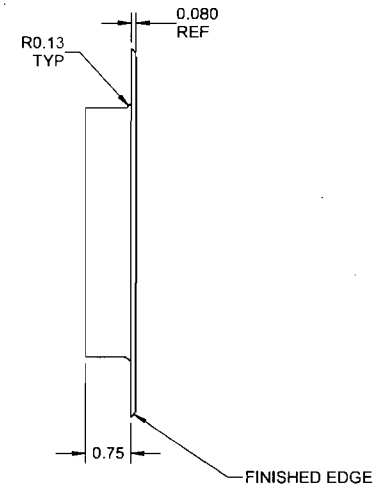

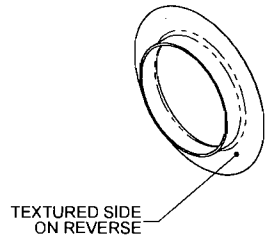

D4380-25 COVER, CABIN LIGHT

NOTES:
1) MATERIAL: KYDEX 6185, 0.080 THICK, P3-VELOUR MATTE, IVORY #62015
REF DART SPEC MKYD6185S.080-P3-62015
2) FINISH: NONE
3) TOLERANCES: PER DART QSI 018 UNLESS OTHERWISE NOTED
4) UNITS: INCHES UNLESS OTHERWISE NOTED
5) BREAK SHARP EDGES: 0.005 TO 0.010 MAX
6) IDENTIFICATION: IDENTIFY PER QSI 044 6.1
7) WEIGHT: 0.07 lbs
8) MINIMUM ALLOWABLE THICKNESS AFTER THERMOFORMING = 0.040
9) TOOLING: THERMOFORM -25 PART PER MOULD DT9747.
TRIM PER MOULD LEAVING FINISHED EDGE.

PRELIMINARY ISSUE
ØC 11.04.05

DESIGN	ØC	**DART AEROSPACE LTD** HAWKESBURY, ONTARIO, CANADA
DRAWN	ØC	
CHECKED		DRAWING NO. D4380 — REV. PA9 — SHEET 13 OF 19
MFG. APPR.		
APPROVED		TITLE: CEILING POCKETS — SCALE: NTS
DE APPR.		
DATE	11.04.05	

COPYRIGHT © 2011 BY DART AEROSPACE LTD
THIS DOCUMENT IS PRIVATE AND CONFIDENTIAL AND IS SUPPLIED ON THE EXPRESS CONDITION THAT IT IS NOT TO BE USED FOR ANY PURPOSE OR COPIED OR COMMUNICATED TO ANY OTHER PERSON WITHOUT WRITTEN PERMISSION FROM DART AEROSPACE LTD.

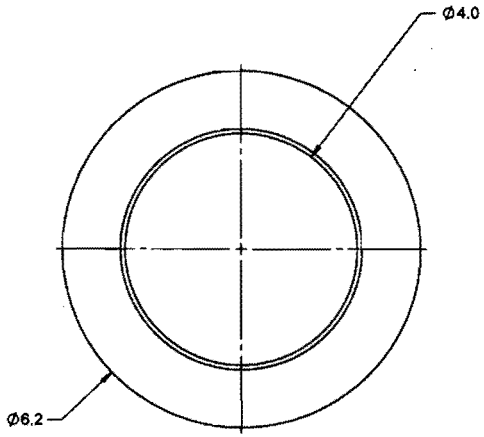

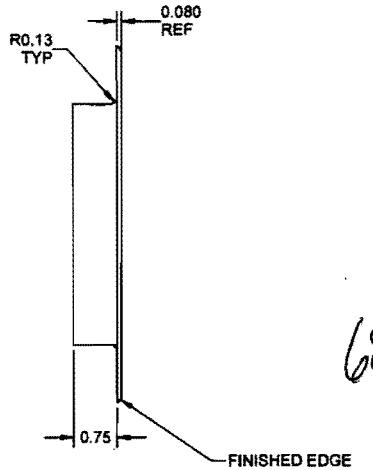

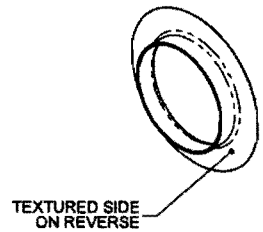

68446

D4380-25 COVER, CABIN LIGHT

RELEASED
2011 -05- 10

NOTES:
1) MATERIAL: KYDEX 6185, 0.080 THICK, P3-VELOUR MATTE, IVORY #62015
REF DART SPEC MKYD6185S.080-P3-62015
2) FINISH: NONE
3) TOLERANCES: PER DART QSI 018 UNLESS OTHERWISE NOTED
4) UNITS: INCHES UNLESS OTHERWISE NOTED
5) BREAK SHARP EDGES: 0.005 TO 0.010 MAX
6) IDENTIFICATION: IDENTIFY PER QSI 044 6.4
7) WEIGHT: 0.10 lbs
8) MINIMUM ALLOWABLE THICKNESS AFTER THERMOFORMING = 0.040
9) TOOLING: THERMOFORM PER MOULD DT9747 AND DART QSI 022
10) TRIM PER MOULD LEAVING FINISHED EDGE

DESIGN	JC	DART AEROSPACE LTD HAWKESBURY, ONTARIO, CANADA
DRAWN	JC	
CHECKED		DRAWING NO. D4380 — REV. A — SHEET 13 OF 19
MFG. APPR.		
APPROVED		TITLE: CEILING POCKETS — SCALE: NTS
DE APPR.		
DATE	11.04.21	

COPYRIGHT © 2011 BY DART AEROSPACE LTD
THIS DOCUMENT IS PRIVATE AND CONFIDENTIAL AND IS SUPPLIED ON THE EXPRESS CONDITION THAT IT IS NOT TO BE USED FOR ANY PURPOSE OR COPIED OR COMMUNICATED TO ANY OTHER PERSON WITHOUT WRITTEN PERMISSION FROM DART AEROSPACE LTD.